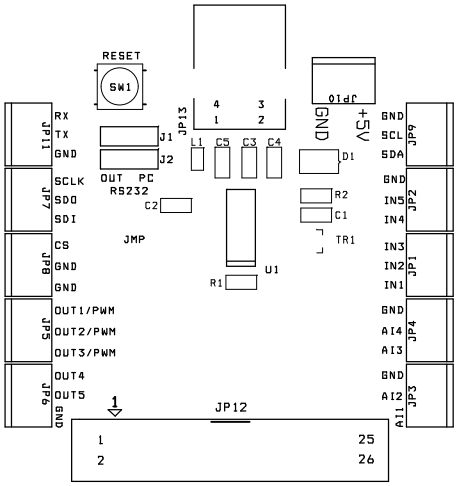
RESET
SW1
JP13
4 3
1 2
JP10
GND
+5V
L1 C5 C3 C4
D1
J1
J2
OUT PC
RS232
C2
JMP
R2
C1
TR1
U1
R1
JP11
RX
TX
GND
JP7
SCLK
SDO
SDI
JP8
CS
GND
GND
JP5
OUT1/PWM
OUT2/PWM
OUT3/PWM
JP6
OUT4
OUT5
GND
JP9
GND
SCL
SDA
JP2
GND
IN5
IN4
JP1
IN3
IN2
IN1
JP4
GND
AI4
AI3
JP3
GND
AI2
AI1
1
JP12
1
2
25
26

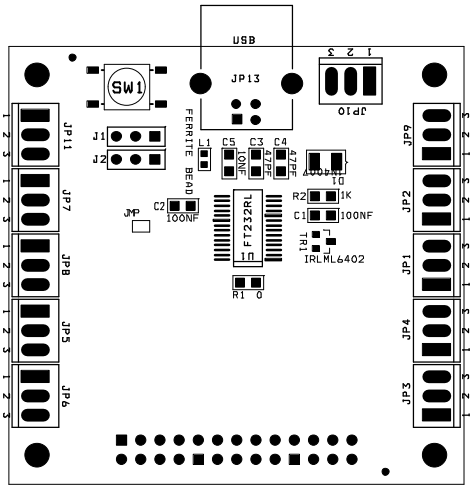
JP3
JP4
JP1
JP2
JP9
1 2 3
JP10
D1
1N4007
R2
1K
C1
100NF
Q1
IRLML6402
U1
FT232RL
C5
100NF
C3
47PF
C4
47PF
L1
FERRITE BEAD
R1
0
C2
100NF
JMP
J1
J2
JP11
JP7
JP8
JP5
JP6
SW1
JP13
USB